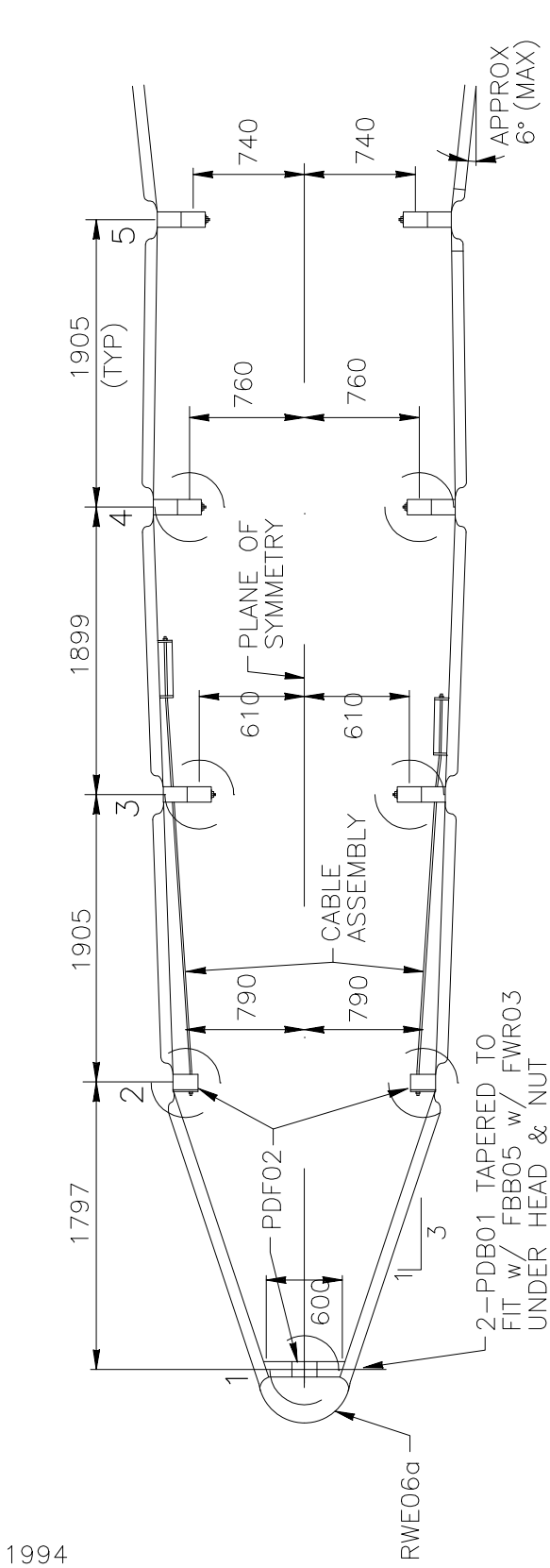

PLAN

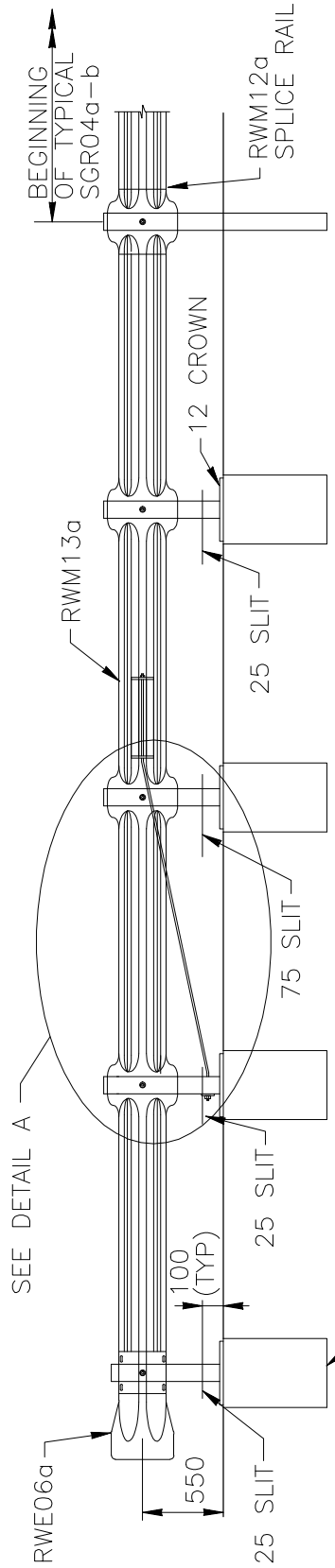

ELEVATION

1994

BULLNOSE MEDIAN BARRIER TERMINAL

SEW09

SHEET NO.	REF. NO.
1 of 4	