STATE	PROJECT NO.	YEAR	SHEET NO.	TOTAL SHEETS
KANSAS				

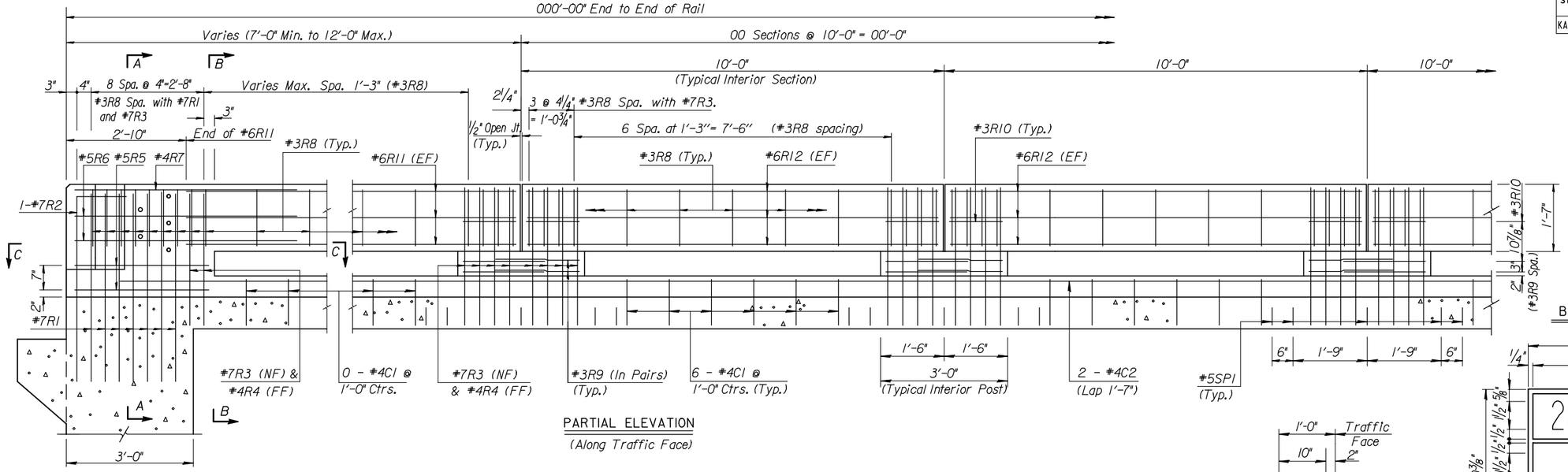

PARTIAL ELEVATION

(Along Traffic Face)

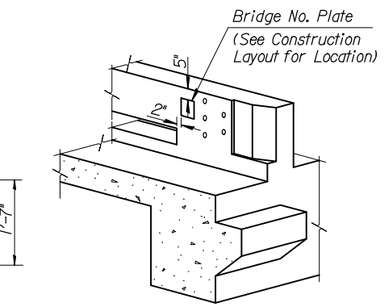

BRIDGE NUMBER PLATE PLACEMENT DETAIL

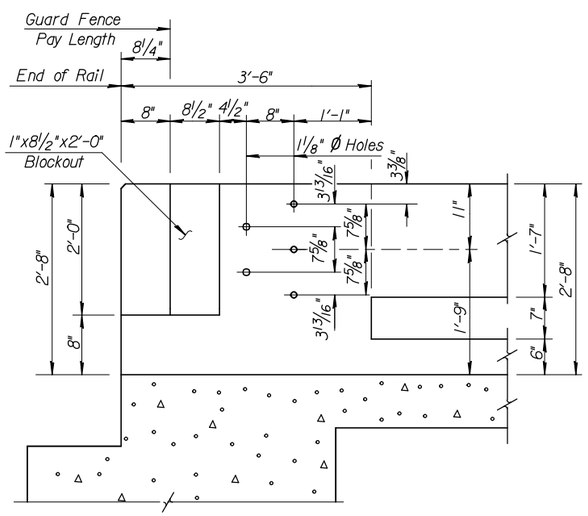

ELEVATION

(Dimensions at traffic face of rail.)

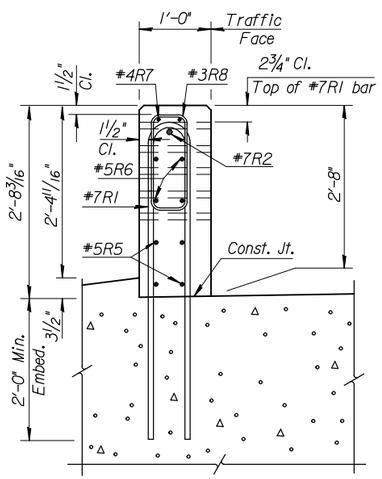

SECTION A-A

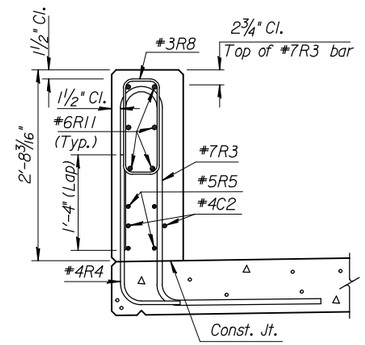

SECTION B-B

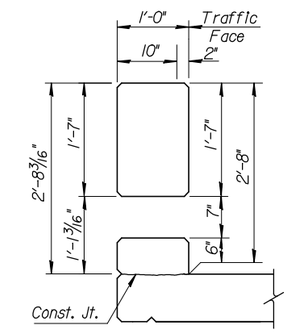

TYPICAL SECTION BETWEEN POSTS

✳ The hook may be canted to provide clearance and/or fit between reinforcing.

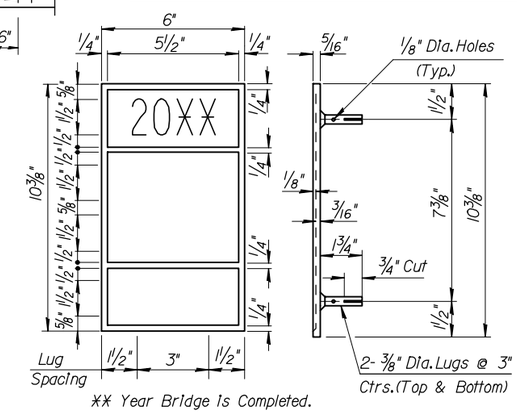

✳✳ Year Bridge Is Completed.

BRIDGE NUMBER PLATE

(1 Required)

(See Construction Layout for Location)

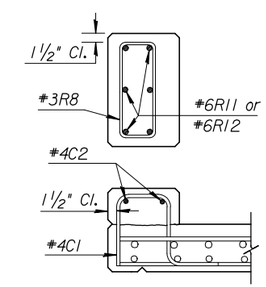

TYPICAL SECTION BETWEEN POSTS

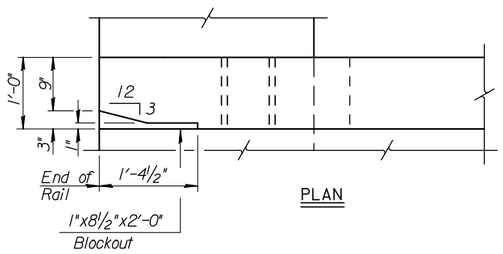

PLAN

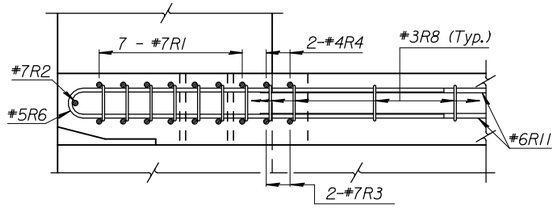

SECTION C-C

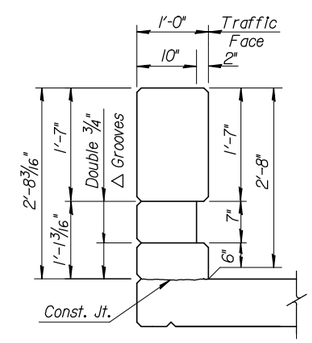

TYPICAL INTERIOR POST

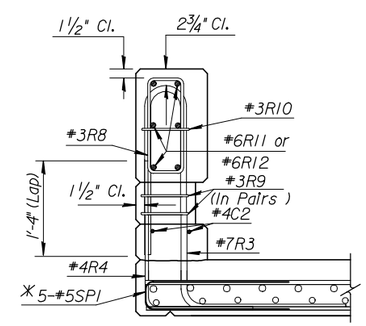

SECTION THRU POSTS

NO.	DATE	REVISIONS	BY	APP'D
3				
2				
1	11-30-99	Current Release		

KANSAS DEPARTMENT OF TRANSPORTATION

Br. No. Sta.

32" KANSAS CORRAL RAIL (With Curb)

Proj. No. Co.

SHEET NO. OF	SCALE	APP'D	
DESIGNED	DETAILED	QUANTITIES	CADD
DESIGN CK.	DETAIL CK.	QUAN. CK.	CADD CK.

Std. Base File: br182d.dgn
Plotted By: hazelton
Plot Location: Bridge Design
File: \\dt06f105\kdot\Bridge\Standards\us\br182d.dgn
Plot Date: 10-FEB-2004 08:40