DESIGNATOR	BASE METAL THICKNESS
RTE02a	2.67

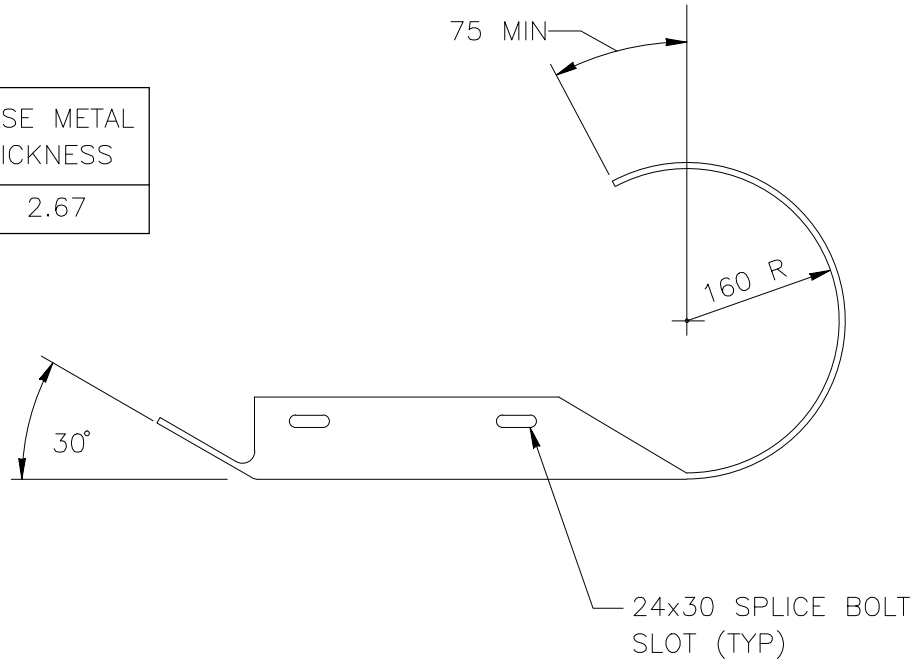

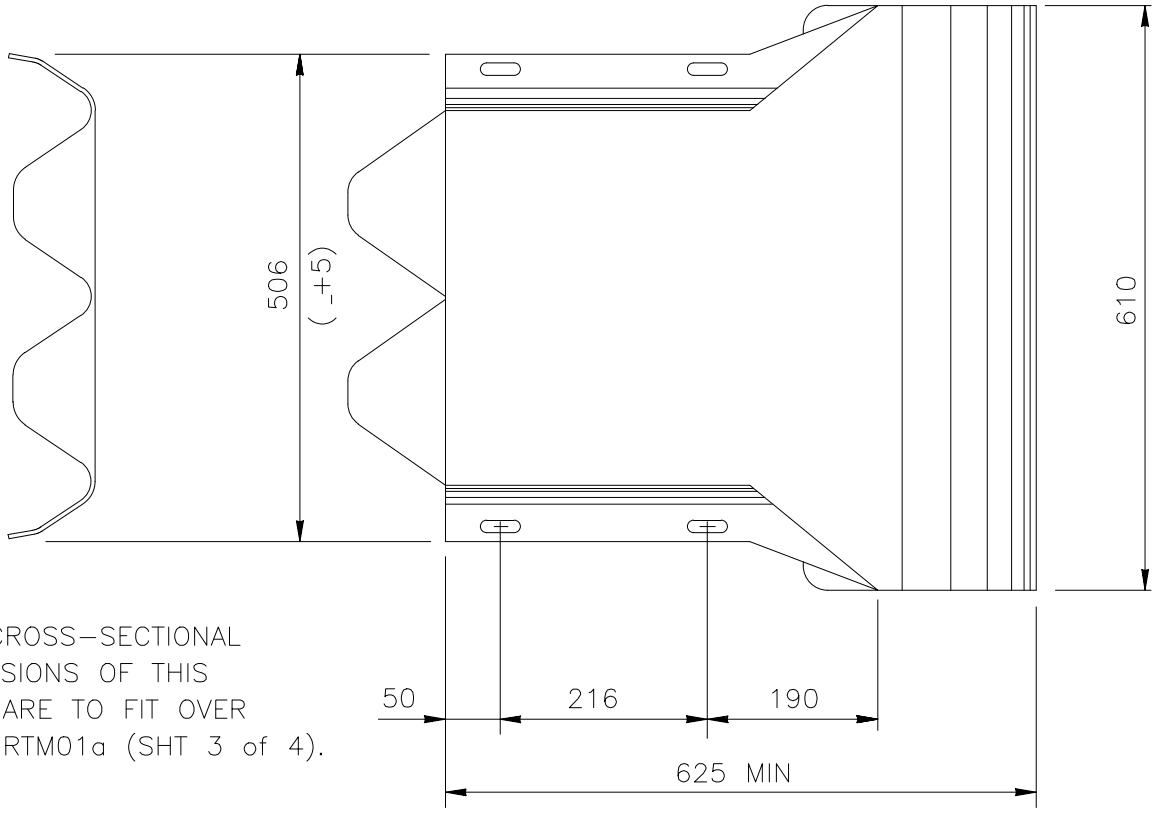

THE CROSS-SECTIONAL DIMENSIONS OF THIS PART ARE TO FIT OVER PART RTM01a (SHT 3 of 4).

1994

THRIE-BEAM END SECTION (ROUNDED)

RTE02a

SHEET NO.	REF. NO.
1 of 2	RE-65-79